‘67-69 Camaro 9” Diff. Housing Bracket Weldment Guide

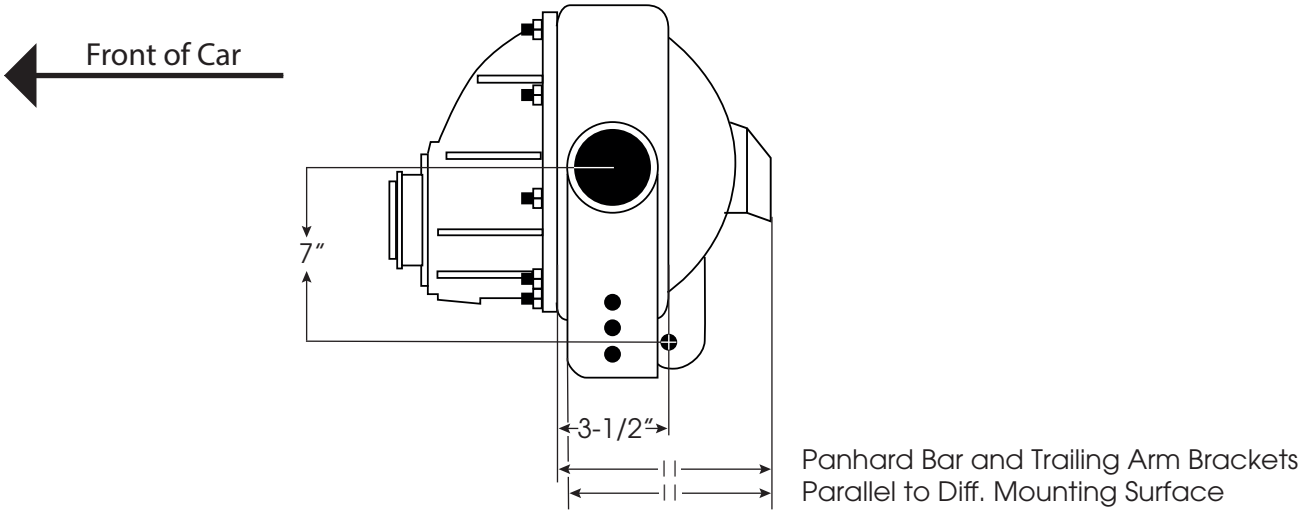

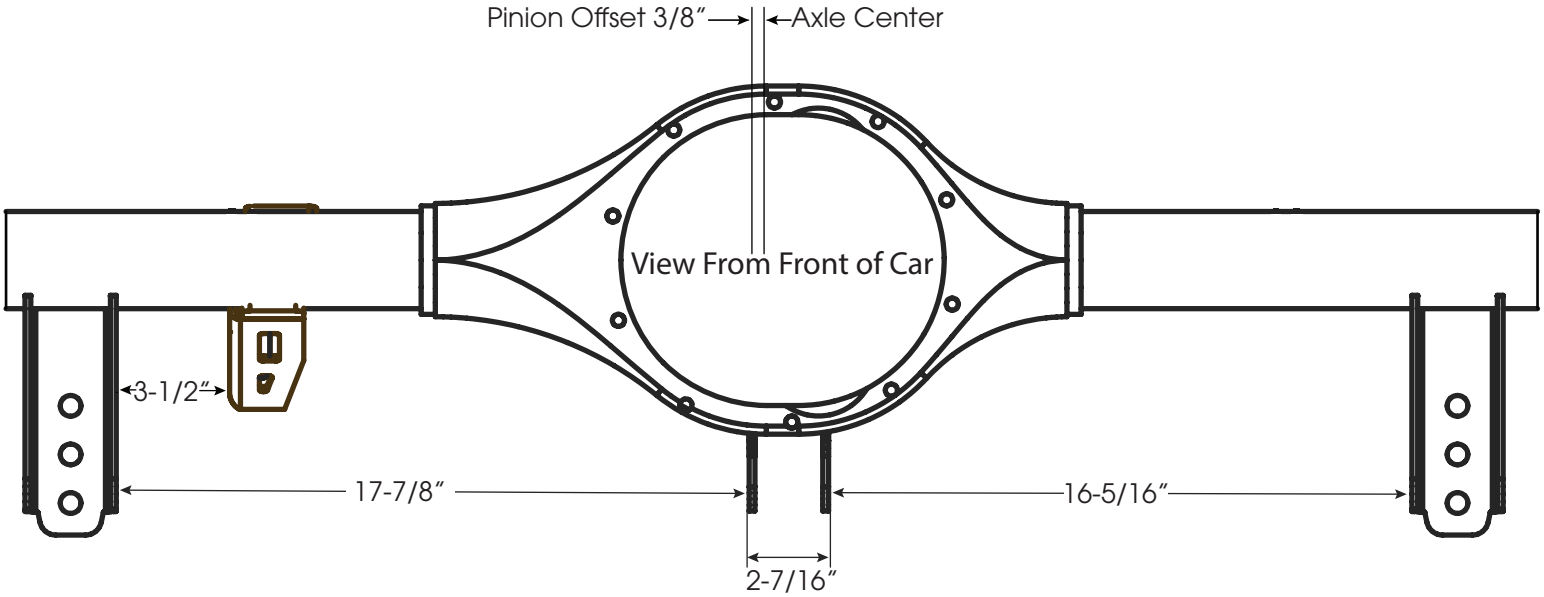

Trailing Arm
Panhard Bar 912703-01
Center Tabs 912705
Sway Bar Tabs 820172

Updated 04/2023